ABO valve

08.10.26

Operating instructions for ABO Shut-off valves series 2E-5

CE

Summary

1. General information 1

1.1. Description 1

1.2. Labelling on the butterfly valve 1

2. Safety regulations 1

3. Transport and storage 5

4. Installation in the pipeline 5

4.1. Prerequisites for installation in pipeline 5

4.2. Working steps during installation 8

4.3. Tightening torque for flange bolts 8

4.4. Installation errors 9

4.5. Disassembly of flange or pipe behind shut-off valve type (LUG-eyebolts) 9

5. Pipeline pressure test 9

6. Operation and maintenance 9

7. Faults/Causes of faults/Troubleshooting 10

8. Valves with electric or pneumatic actuator 10

9. Bolt lengths for pipes with weld-neck flanges according to EN1092-1 11

9.1. Bolt lengths for connection to the piping of valves with type B (Wafer) and T(Lug) bodies 11

9.2. Bolt lengths for connection to the piping of valves with type DF (Double Flange) bodies 14

1. General information

The following manual provides detailed instructions for the installation, operation and maintenance of ABO Series 2E-5 double-eccentric butterfly valves. Failure to follow these instructions may compromise safety and void the manufacturer´s warranty.

Based on many years of experience in the field of shut-off valves, ABO Valve has determined that most operational issues encountered with ABO Series 2E-5 double-eccentric valves are related to improper installation. For this reason, it is very important to follow the instructions in the ABO Valve installation manual.

1.1. Description

The Series 2E-5 Double-eccentric butterfly valves are designed to shut-off and regulate flow in the piping system as required. Installation is carried out between the flanges of the piping system. The Series 2E-5 designed for more demanding industrial applications and for media with higher pressure and temperature values. The appropriate valve type and material selection should be determined based on the datasheets or the manufacturer's recommendations. The Series 2E-5 butterfly valves fully comply with the CE/97/23 directive.

1.2. Labelling on the butterfly valve

Each 2E-5 Series double-eccentric butterfly valve is equipped with an identification label, which lists the attributes used to identify the valve.

2. Safety regulations

Before performing any activities, it is necessary to carefully study and perform activities as listed in the safety regulations. Warranty may be void if adhearance to approved safety regulations is not strictly followed. All work during installation, disassembly, operation and maintenance of the valve must be performed by professionally trained personnel.

Basic safety rules:

- The valve can be operated safely if the pressure and temperature parameters of the media comply with the nominal specifications for the given type of valve.
- The materials of the individual valve components must be suitably selected to withstand the specific media and its operating parameters.
- The valve must not be used for applications for which it was not designed. When changing the media or chemical composition of media, it is necessary to consult with a competent member of the ABO team.
- Before removing the valve from the pipeline (or before replacing the shaft packing), the pipeline upstream and downstream of the valve must be depressurized (risk of uncontrolled fluid release). After removal from the pipeline, the valve must be decontaminated.
- If the valve is used as an dead-end valve, it must be securely locked in the closed position (locking lever, etc.).
- If it is necessary to open an dead-end valve in a pressurized pipeline, attention must be paid to the escaping media to prevent potential damage or personal injury.
- If the valve needs to be removed from the pipeline, the pipeline must be depressurized, and for hazardous media, it must be completely drained.
- The inner diameter of the flange must be sized to prevent damage to the disc during opening. An internal diameter that is too small may cause the disc to jam and may damage it. An inner diameter that is too large may prevent the outer seal between the sleeve and the pipe flanges from functioning properly. The recommended radial clearance between the disc and the mating bore is provided in Tab. 4.
- The 2E-5 series butterfly valves in the **ATEX** version comply with the requirements of ČSN EN ISO 80079-36:2016 and ČSN IEC 60079-0:2018 standards. The valves must be conductively connected to the grounded part of the connected equipment and must be installed in such a way as to prevent creepage discharges on the outer surface of the valve. Grounding must comply with the requirements of CLC/TR 60079-32-1:2018, Art. 13.

  The actual maximum temperature of the product does not depend on the product itself, but on its operating conditions, in particular the temperature of the operating media and the ambient temperature. The maximum surface temperature of the valve in relation to the ignition temperature of the explosive atmosphere present must meet the general requirements specified in ČSN EN 1127-1:2020, Art. 6.4.2, or ČSN EN 1127-2, Art. 6.4.2. To determine the maximum surface temperature of the product T in relation to its operating temperature $T_{operating}$, the following applies: $T_{operating}$ <+40°C: T=40°C; -40°C<$T_{operating}$≤+450°C: T=$T_{operting}$. The ambient temperature range is -40°C≤T_a≤+60°C.

  A specific maximum surface temperature or specific temperature class must not be exceeded regarding the operating temperature of the media specified on the manufacturer´s label:

  a) For group I equipment:
     - 150 °C on any surface where coal dust may accumulate in layers
     - 450 °C, where coal dust is expected to accumulate layers, provided that the actual maximum surface temperature is marked on the equipment

  b) For group II equipment (EPL Ga):

Tab. 1: Operating temperature of the media and max. surface temperature for group II

Operating temperature of the media		Max. surface temperature
EPL Ga	EPL Gb	
≤ 68 °C	≤ 80 °C	T6
≤ 80 °C	≤ 95 °C	T5
≤ 108 °C	≤ 130 °C	T4
≤ 160 °C	≤ 195 °C	T3
≤ 240 °C	≤ 290 °C	T2
≤ 360 °C	≤ 440 °C	T1

c) For group III equipment (EPL Da):

Tab. 2: Operating temperature of the media and max. surface temperature for group III

Operating temperature of the media	Max. surface temperature
≤ 85 °C	85 °C
≤ 100 °C	100 °C
≤ 135 °C	135 °C
≤ 200 °C	200 °C
≤ 300 °C	300 °C
≤ 450 °C	450 °C

Summary of identified hazards and application of preventive and protective measures for ATEX-compliant valves:

- Electrostatic discharges – on parts made of non-metallic materials with a resistance greater than 1 GΩ.
- Mechanical spark – if the speed of movement does not exceed 1 m/s, it is considered irrelevant in terms of frequency of occurrence, including all measures.

The 2E-5 series butterfly valves in ATEX design are certified as FTZÚ 19 Ex 0014. The certificate does not apply to any electrical or pneumatic equipment used to control the valve.

The 2E-5 Series butterfly valves in ATEX design can be coated with a paint system that must meet the criteria specified in the diagram below

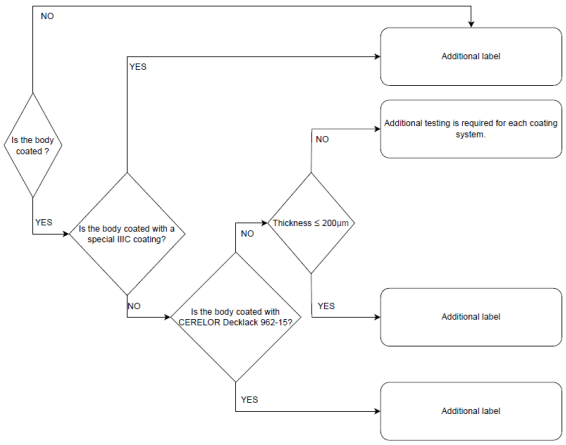

Fig. 1: Diagram of applicability of coating systems on 3E valves in ATEX options

A coating system with a thickness ≤ 200 µm can only be applied to Group I and II equipment, not to Group III explosive dust atmospheres. For dusty atmospheres, a coating system with low dielectric strength must be used (the breakdown voltage of the coating system must be less than 4kV). This means that any coating system with a thickness > 200 µm must be additionally tested.

In case of damage to the coating, the customer must contact the manufacturer's service department. The coating system can be repaired. The repair must be carried out using the same coating system that was already applied to the valve, and the thickness of the repaired coating must not exceed 200 µm.

- The oxygen-compatible and silicone-free valve must be kept in its original plastic packaging from the manufacturer until final installation in the piping. Use clean tools (free of grease, dust, etc.) and appropriate clothing during installation to prevent contamination of the valves.
- The valves with actuator must be adjusted before installation in the ductwork, with emphasis on adjusting the end positions.
- Actuated control valves must be designed to prevent cavitation (consult the manufacturer if necessary)
- Thoroughly check the function of the valve with actuator only after installation between the pipe flanges.
- When transporting and storing valves without a lever or actuator, it must be ensured that the valve cannot be opened (risk of damage to the disc)
- The position indicator shows the position of the butterfly valve. If the indicator is perpendicular to the pipe, the valve is closed; if the indicator is parallel to the pipe, the valve is open.

- Flange mounting – flat or spiral gaskets must be inserted. The gasket material must be suitable for the given media.
- The valves are not self-locking, therefore the lever or actuator must not be removed while the pipe is under pressure. If it is necessary to install a valve without a actuator, it is necessary to ensure that this valve is not under pressure.
- Before installing the valve, the interior must be clean and free of mechanical impurities (scale, slag, etc.).
- The valve must be opened and closed smoothly, not abruptly, to prevent hydraulic shock, which could damage the piping and potentially endanger people.
- Use only ABO Valve OEM parts for servicing ABO Valves.
- The pipe connection must be made in such a way that no stress (external forces) or vibrations are transmitted to the valve during and after installation. Do not use the valve as a support for pipe construction.
- Recommendation: The valves must be installed in piping with a stabilized flow. The general rules for stabilizing flow behind a pipe element causing turbulence (e.g., pump, other valves, etc.) must be observed. Generally, calculate a minimum of 6xDN upstream and a minimum of 4xDN downstream (Fig. 2), but this depends on the specific conditions specified by the designer.

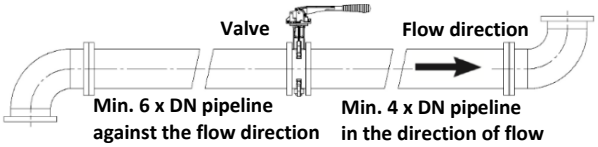

Fig. 2: Valve in the pipeline

- If the temperature of the media in the pipeline or the ambient temperature is higher or lower than the actuator manufacturer´s recommended limits, the actuator must be insulated (protected) from these temperatures in accordance with the actuator manufacturer´s instructions
- For single-acting pneumatic actuators in NO (normally open) design, the sealing edges of the butterfly valve must be protected during transport and storage. During installation, the valve must be closed manually, or air must be connected to the pneumatic actuator and the valve closed.
- Pneumatic (or hydraulic) actuators must be adjusted so that rapid closure (or opening) does not occur. Unless otherwise specified, a closing time of t [sec]=DN/50 is recommended.
- Double-acting pneumatic actuators are not self-locking, so they must always be under air pressure.
- The electric actuator must be adjusted so that the actuator is switched off by the limit switch, not by the torque switch (see the electric actuator manufacturer's instructions).
- For valves DN300 and larger, a horizontal shaft position is recommended. For valves DN50-250, any installation position is permitted (unless otherwise restricted by the actuator manufacturer).
- Operation of the actuator mounted on the valve is permitted only when the butterfly valve is connected to the pipeline on both sides. Operating the valve without meeting this condition poses a risk of injury, for which the user is solely responsible. An exception applies to valves with a normally open (NO) actuator, where the disc is in the open position by default. In this case, it is essential to partially close the disc before installation using air or the actuator controls.
- Manual operation of the valves should be performed without excessive effort. The use of lever extension or striking tools is not permitted.
- The valve must be lifted using slings passed through the lifting lugs, or threaded lifting eyes screwed into the T-body or valve neck (Fig. 3). Never lift the valve by the actuator or through the internal disc opening.

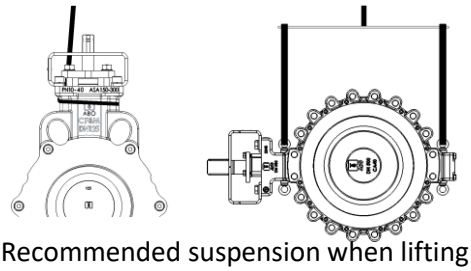
Fig. 3: Recommended suspension when lifting valves

- Never step on the valves or actuators
- Valves must never be installed directly on rubber expansion joints, as this may increase the torque, making the valve practically inoperable.

- After disassembling the valves from the pipeline, take care to avoid damage to the sealing surfaces.
- In the event of valve malfunction or damage, contact our claims department (reklamace@abovalve.com) or the sales department.

3. Transport and storage

Proper storage guidelines:

- It is recommended to store valves in closed, dry, dust-free, and temperature-controlled spaces at temperatures between +5 °C and +25 °C. Valves are not recommended to be stored directly on the floor. Relative humidity should not exceed 50%. Keep the valve in its original factory packaging until the start of installation.
- Store the valves with the disc in the closed position,unless another position is specified, for example, by a pneumatic actuator with an emergency function.
- Valves should not be stacked, if possible, as this may damage the seat. If stacking is necessary, each layer must be separated with an appropriate spacer.
- During long-term storage, the valve disc must be rotated regularly to prevent the moving parts of the valve from seizing.
- Protective coatings and preservative layers should be inspected at six-month intervals and repaired if necessary.

Proper transportation guidelines:

- When handling larger valves with a crane, they must be lifted only by the body or lifting eyes, never by the actuator or lever (Fig. 3).
- Use lifting equipment with sufficient load capacity, including slings and ropes.
- A three-point lifting method (for balanced support) is recommended.
- Valves supplied without an actuator must be secured and transported in a way that prevents them from opening due to external influences (vibrations) during transport.

4. Installation in the pipeline

Installation of valves into the piping system must be performed by a properly trained and qualified person.

4.1. Prerequisites for installation in pipeline

- The valve is installed exclusively between pipe flanges. It can be installed at the end of the pipe only when using a counterflange or a "lug" version without a counterflange, but in the opposite direction (Fig. 7) and with reduced pressure (p_{prac} x 0,7)
- Before installation, it is necessary to verify that the delivered valve corresponds to the required PN, DN, and materials for the intended application, and that no damage occurred during transport (a damaged valve must not be used!).
- Before installation, it is recommended to remove the protective coating from the valve using a warm aqueous solution of a common detergent or a solvent, e.g., E 550 CLEAN, etc
- It is necessary to use flanges with a flat sealing surface, e.g., type B according to EN 1092, along with the appropriate flat gasket or spiral-wound gasket.
- Never weld the flanges to the pipeline with the valve installed, as this would damage the valve's sealing.
- Before installation, check the proper operation of the valve (full-range opening and closing).
- Before installing the valve, thoroughly clean the piping system of mechanical impurities, scale, rust, slag, etc. No sharp edges should be present on the components that could damage the sealing surface or gasket.
- After storing valves at temperatures below 0 °C, they must be placed for 24 hours in an environment with a temperature of at least 10 °C prior to installation. This allows the valves to warm through completely. Only then may they be installed in the pipeline.
- The pipeline must not be pressurized during valve installation.
- The flanges must be aligned so that the valve can be inserted freely without damaging the sealing surfaces.
- The pipeline flanges must be parallel, and the axes of both pipelines must be coaxial. Misaligned flanges can cause leakage at the valve seat due to uneven pressure on the seat. Flange parallelism tolerances (Tab. 3) are specified according to **EN 558**. **<u>Checking the internal diameter of the pipeline flanges is essential for reliable valve operation!</u>**

Tab. 3: Tolerances of parallelism

DN	Tolerance [mm]
32-150	0,6
200-300	0,8
350-500	1,0
600-800	2,0

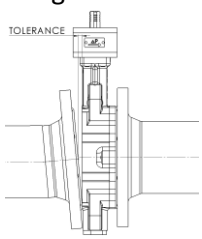

Fig. 4: Parallelism of flanges

- Due to pipeline stresses, misalignment, flange non-parallelism, or flange spacing exceeding the valve's face-to-face length, proper tightening of the valve in the flange connection cannot be reliably ensured by torque control alone.
- Check the internal diameter of the mating flanges to ensure proper valve operation (disc rotation). Information on the valve disc projection dimensions can be found in Tab. 4. Account for possible pipeline misalignment, disc clearance, and imperfect valve centering. An excessively small flange internal diameter may cause the disc to jam, resulting in severe disc damage and valve malfunction (see Fig. 5b). An excessively large flange internal diameter may prevent the proper function of the gasket installed between the valve and the pipeline flange (see Fig. 5c).
- In general, it is recommended to install the valve in a vertical position within the piping system. However, there are applications where the valve is installed in a horizontal position (Tab. **5**). Recommended positions , see Fig. 6.

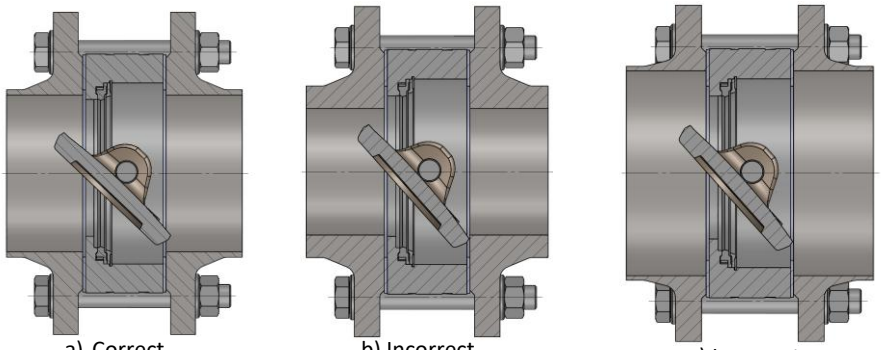

a) Correct b) Incorrect c) Incorrect

Fig. 5: Installation between flanges

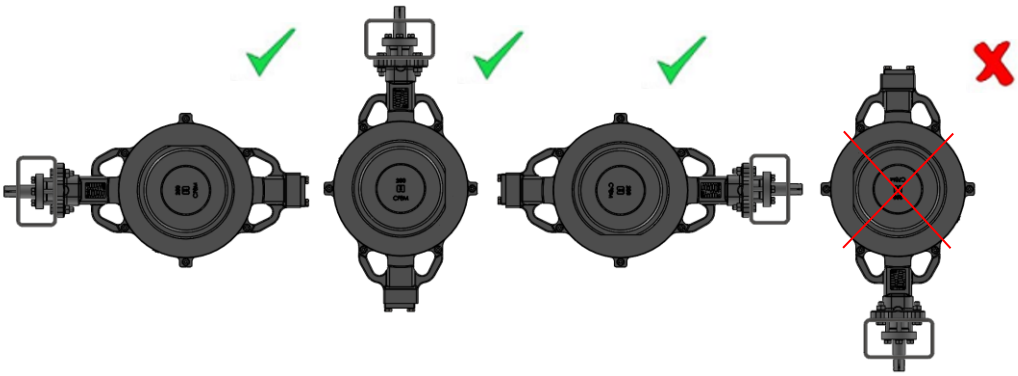

Fig. 6: Recommended positions of the valves when installed in the pipe

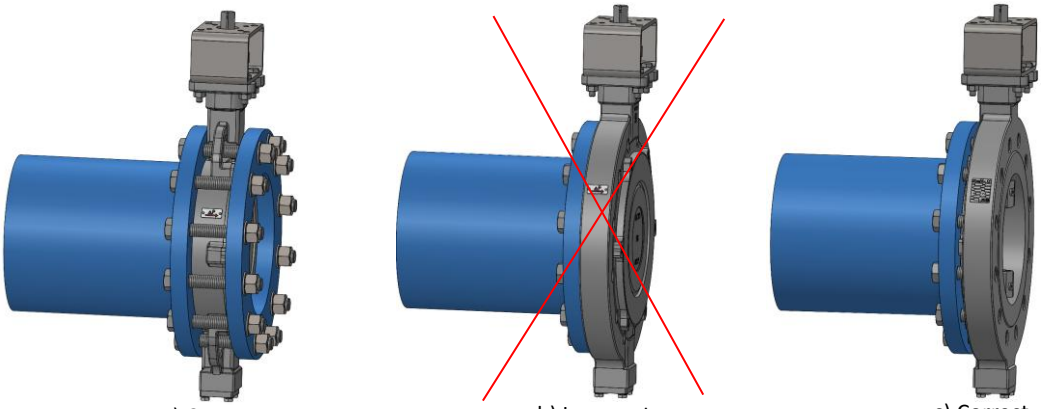

a) Correct b) Incorrect c) Correct

Fig. 7: Installation at the end of the pipe

Tab. 4: Dimension of the disc overlap from the valve and inner diameter of the flange

DN		Overlap of the disc from the valve Z, [mm]	Construction length E, [mm]	Inner diameter of neck flange EN1092-1 type 11 on pipe PN6-40 /ASME B16.5 CLASS 150-300 / GOST PN40, [mm]	Min. inner diameter of the pipe flange, [mm]
50	2“	37	44 B,T	54,5 / 52,5 / 48	40
65	2 1/2“	55	47 B,T	70,3 / 62,7 / 66	58
80	3“	72	47 B,T/114 F	82,5 / 77,9 / 78	75
100	4“	91	53 B,T/127 F	107,1 / 102,3 / 107,1 řada 2	94
125	5“	114	57 B,T/140 F	131,7 / 128,2 / 120	117
150	6“	143	57 B,T/140 F	159,3 / 154,1 / 159,3 řada 2	146
200	8“	192	61 B,T/152 F	206,5 / 202,7 / 200	198
250	10“	235	69 B,T/165 F	260,4 - 258,8 / 254,6 / 252	241
300	12“	284	79 B,T/178 F	309,7 - 307,9 / 304,8 / 301	290
350	14“	307	92 B,T/190 F	341,4 - 338 / 336,5 / 351	313
400	16“	359	103 B,T/216 F	392,2 - 384,4 / 387,3 / 398	365
450	18“	419	114 B,T	442,8 - 432 / 438,1 / 448	425
500	20“	454	127 B,T/229 F	493,8 - 479,6 / 488,9 / 495	460
600	24“	547	154 B,T	595,8 - 578 / 590,5 / 595	560

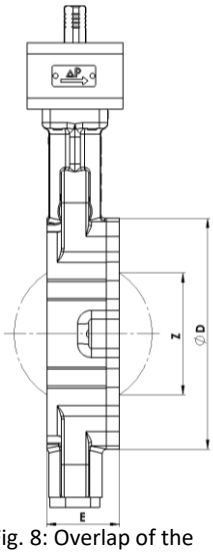

Fig. 8: Overlap of the disc from valve

Tab. 5: Valve orientation

Incorrect installation	*Correct installation*	*Incorrect installation*	*Correct installation*
Abrasive substances		**Knee**	
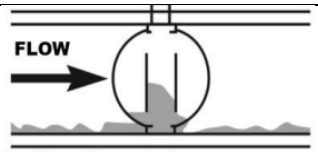 **Vertical shaft, sludge accumulates on the disc**	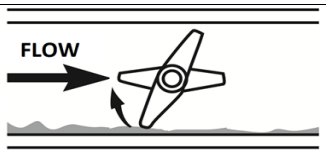 **Horizontal shaft, sludge passes under the disc**	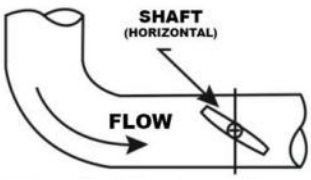 **Valve shaft (horizontal)**	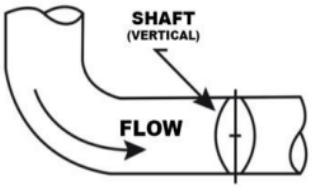 **Valve shaft (vertical)**
T- piece		**Redukce potrubí**	
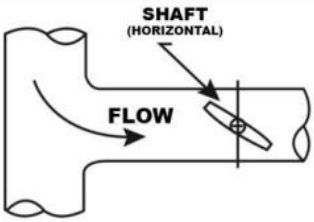 **Valve shaft (horizontal)**	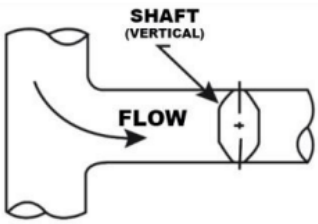 **Valve shaft (vertical)**	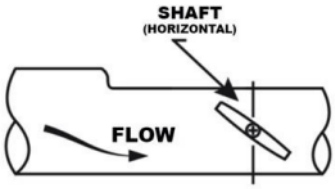 **Valve shaft (horizontal)**	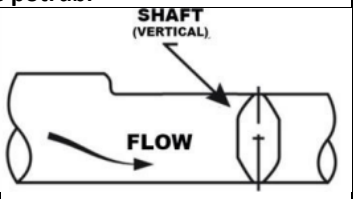 **Valve shaft (vertical)**
Valve orientation		**Centrifugal pump – shaft orientation**	
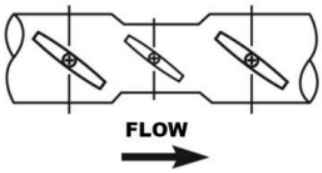 **Increased noise, erosion and vibration**	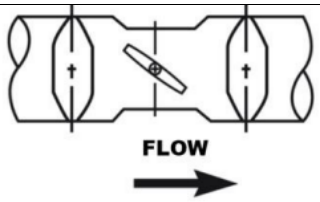 **Reduced noise, erosion and vibration**	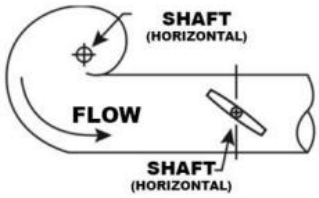 **Horizontal pump shaft and horizontal valve shaft**	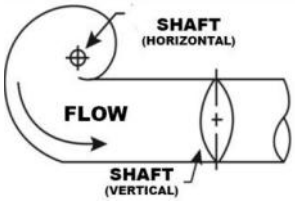 **Horizontal pump shaft and vertical valve shaft**
Centrifugal pump - pump shaft vertical and the horizontal valve shaft		**Axial pump – pump shaft vertical and vertical valve shaft**	
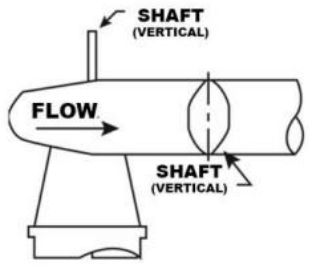 **Vertical pump shaft and vertical valve shaft**	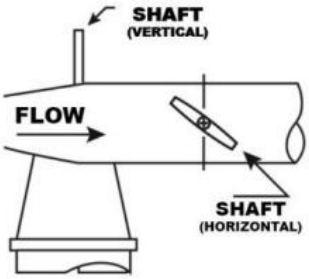 **Vertical pump shaft and horizontal valve shaft**	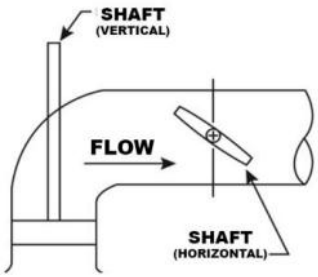 **Vertical pump shaft and horizontal valve shaft**	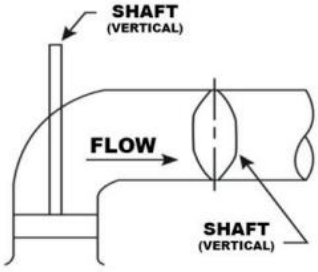 **Vertical pump shaft and vertical valve shaft**

4.2. Working steps during installation

- Insert the valve with the disc in the closed position between the flanges. Insert the gasket at the same time. Then secure the valve with 2 upper and 2 lower bolts, lightly tighten, and center the valve. **For valves with thicker coatings (C4, C5), exercise increased caution during installation and bolt tightening to prevent cracking of the coating.**
- By opening the valve, verify the correct and unobstructed movement of the disc.
- Tack-weld the flanges to the pipeline at several points.
- Remove the valve and weld the flanges to the pipeline around their entire circumference. After the flanges have cooled, reinstall the valve between the pipeline flanges, align it, and lightly tighten the four bolts. Open the valve again to verify correct operation throughout the full range of disc movement.
- Install the remaining bolts. Always tighten bolts in a cross pattern (see. Fig. 9).
- Check the proper operation of the valve again by fully opening and closing it.
- For ATEX versions, connect the grounding wire from the valve to the pipeline, which must also be properly grounded.

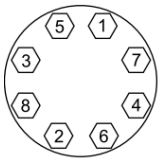

Fig. 9: Cross tightening

4.3. Tightening torque for flange bolts

When installing eccentric butterfly valves in a piping system, there are several factors that affect tightening torques. Below is a list of information that affects tightening torques.

Tab. 6: Factors affecting the tightening torques

Valve	Type / Size / Material	**Lubrication**	Aplication / Type
Flange	Type / Size / Suface finishes	**Torque wrench**	Use / Accuracy
Bolt / Stud	Type / Material / Surface conditions	**General factors**	Temperature / Screw tightening speed / Method of tightening (cross-tightening to evenly distribute the tension on the connections)

- Due to the vast number of conditions that the valve is subject to, it is not possible to provide a precise tightening torque.
- The procedure for installing the valve into the piping system, using the tightening torques from Tab. 7, is described in Chapter 4.2.
- ABO Valve provides this manual only as an installation recommendation. This recommendation is based on full compliance of all supplied materials with their respective specifications.
- Tightening must be performed gradually in a cross pattern, with incremental torque application of 30% / 60 % / 100% of the M_k in Tab. 7.
- The tightening torque values are based on the use of new, lubricated fasteners. When using non-lubricated fasteners, 20 % may be added to the recommended tightening torque values. Any increase of the torque values from Tab. 7 is permissible only in the case of leakage at the flange joint and only after approval by the manufacturer following verification of all the factors mentioned above.
- When installing valves into the pipeline, washers must be placed under the heads of bolts and nuts to distribute pressure within the joint and to reduce friction during tightening.
- For wafer type (Type B) lugless valves, where bolts or threaded rods are not screwed into the body, the recommended bolt tightening torques may, if necessary, be increased up to the maximum values specified by the manufacturer of the selected fasteners.
- For T (lug)/B (wafer) type valves with blind threaded holes in the body, only threaded rods may be used during valve installation into the pipeline, and they must be tightened to the recommended torque values from Tab. 7. The threaded rod must be fully screwed into the blind thread until it bottoms out.

- For T-type (lug) valves with through-threaded holes, bolts or threaded rods must be screwed into the body to a minimum depth of **0,67×D**, where D is the nominal diameter of the bolt/threaded rod. When bolts are used, it must be ensured that the bolts do not contact each other inside the body, as this would prevent proper tightening of the flange joint.
- The tightening torques listed in Tab. 7 apply only to soft-seated ABO S2E valves and are not valid for the other valve types.

Tab. 7: Recommended bolt tightening torques M_k

Screw		M_k [Nm]	Screw		M_k [Nm]
M12	-	53	M30	1 1/8"-7 UNC	476
M16	5/8"-11 UNC	128	M33	1 1/4"-7 UNC	639
M20	3/4"-10 UNC	249	M36	-	824
M24	7/8"-9 UNC	238	M39	1 1/2"-6 UNC	837
M27	1"-8 UNC	349	M45	1 3/4" UNC	863

4.4. Installation errors

- Insufficient parallelism of the flange – The pressure on the seal will be uneven on both sides, causing deformation of the seal and thus leakage between the flap and the flange.
- The flanges are too close to each other – The seal may be damaged during installation. Conversely, if the flanges are too far apart, tightening will cause excessive tension in the pipe.
- Use of incorrect flanges – The disc may collide with the inner opening of the flange (if the inner diameter is too small), which will prevent the disc from opening freely and cause damage to it.
- Use of unsuitable gasket between the valve and pipe flange – This will result in improper sealing performance and, consequently, media leakage.
- Welding near the shut-off valve – the seal may be damaged by high temperatures.

4.5. Disassembly of flange or pipe behind shut-off valve type (LUG-eyebolts)

The same safety rules apply as for installation.

- Close the pressure supply to ensure that no overpressure occurs during flange or pipeline disassembly.
- The disc must be in the closed position.
- Check that the pressure upstream of the valve does not exceed 6 bar for DN50 - 200 valves and max. 3 bar for DN250 and larger valves. The figures below show LUG valves (with threaded holes) mounted between pipe flanges.
- Gradually loosen the screws in a cross pattern as shown in Fig. 9 on the side behind the valve, then remove the flange and pipe behind the valve (Fig. 10).

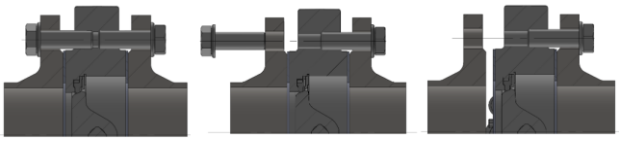

Fig. 10: Removing the flange behind the valve

5. Pipeline pressure test

The valve itself is depressurized by the manufacturer. After installation in the pipeline, it is necessary to pressurize the entire pipeline section with valves. In doing so, the following must be observed:

- The newly installed segment must be thoroughly flushed (cleaned) before mounting valves and all mechanical impurities removed.
- The test pressure with open valves is 1,5 times PS.
- The test pressure with closed valves is 1,1 times PS.

6. Operation and maintenance

- For manual operation of the 2E-5 valve, it is recommended to use a manual worm gear actuator. Opening and closing must be gradual, not abrupt, to prevent hydraulic shock.
- For manual operation of the valve, normal force is sufficient; it is not necessary to extend the lever length.
- The open and closed positions are indicated by an arrow on the worm gearbox. Arrow parallel to the pipeline = open position, arrow perpendicular to the pipeline = closed position. Lever parallel to the pipeline = valve open, lever perpendicular to the pipeline = valve closed.
- The valves close clockwise and open counterclockwise.
- Valves with electric or pneumatic actuators are operated via control signals and are preset by the manufacturer. Do not modify these settings without the manufacturer's approval.
- The valves are maintenance-free; during operation, only monitoring for leakage between the valve and the pipeline flange is required.
- If there is a problem with the tightness of the seat or shaft, the seat or shaft packing can be replaced.
- If the valve remains in the same position for a long time, it is advisable to close and open the valve several times at least four times a year.

7. Faults/Causes of faults/Troubleshooting

Symptom	Possible cause	Solution
Leakage between valve and pipe flanges	Flange bolts are not tightened	Tighten the bolts
	The valve is not centred	Reinstall the valve into proper position
	Large inner flange diameter	Flange replacement
	Burnt or demaged seat	Seat replacement
	The flanges are not parallel	Total repair necessary
	The flanges are demaged by welding or not completely straight	Total repair necessary
The valve cannot be closed or opened	Solid particles between the seat and the disc	Remove the valve and clean it, or replace demaged parts
	The media pressure is higher	Check the media pressure
	Actuator is blocked	Check the actuator
	The electric actuator is not connected to the mains	Connect the actuator to the mains
The valve in the closed state is leaking	Incorrect close position	Check position adjustment
	Worn disc	Disc replacement
	Worn seat	Seat replacement
Leakage through the packing	Not tightened nuts of the packing flange	Tighten alternately (in quarter turns)
	Demaged packing	Replace the packing
Bursting function	Dirt caught in the valve	Open and close the valve several times and flush it
	Insufficient air supply to the actuator	Increase pressure or volume of the supplied air
The valve does not rotate	Actuator failure	Replacement or repairs of the actuator
	The valve is clogged with dirt	Flush or clean the valve
The disc cannot be fully opened and closed	Incorrect inner diameter of the flange	Total repair necessary
	Incorrect disc diameter	Total repair necessary
Increased torque and torque on the valve	Dirt on the disc/seat	Clean the disc/seat
	Improper installation of the valve in the pipeline	Check the installation of the valve in the pipe
	The actuator is not fastened properly	Tighten the bolts that fasten the actuator
The valve is noisy	Improper mounting position	Change the mounting position
	The valve works outside the designed parameters	Check the project conditions vs the operation conditions

8. Valves with electric or pneumatic actuator

The above principles fully apply to valves with electric or pneumatic actuators. Actuators are factory-set with end positions, and modifications are not permitted. For pneumatic actuators, the supply (or exhaust) of control air must be throttled to prevent rapid closing, which could cause hydraulic shock in the pipeline.

Customer-installed actuator:

- The actuator closing torque must not exceed the maximum allowable stem torque (MAST), see. Tab. 8.
- Check the compatibility between the actuator and the valve. Do not use excessive force when mounting the actuator onto the stem!
- The actuator must not transmit axial forces to the stem – only rotational motion.

Tab. 8: Torques for opening, MAST

DN	MAST [Nm]	Torques for opening [Nm]					
		6	10	16	25	40	50
50	104	19	20	21	24	29	31
65	104	22	23	26	31	36	43
80	172	33	34	38	45	50	56
100	172	47	67	68	78	87	95
125	172	50	60	75	79	115	-
150	387	150	153	170	205	265	-
200	387	200	245	290	380	540	-
250	839	350	450	510	685	-	-
300	1550	457	575	773	965	-	-
350	1550	1320	1700	1900	2850	-	-
400	3675	1455	1633	1882	2320	-	-
450	8057	1363	1915	2541	3430	-	-
500	12840	2510	3443	4252	5346	-	-
600	18145	3600	4700	5360	7700	-	-

Electric actuator adjustment:

- Set the mechanical stop for the closed position and adjust the position switch.
- Set the torque switch for opening (opening torque ×1.25).
- Set the mechanical stop for the open position and adjust the actuator position switch.

Adjustment of double-acting (DA) and single-acting (SA) pneumatic actuators:

- Add a safety factor of x1.25 to the opening moment from Tab. 8 (or use the maximum MAST moment, which must not be exceeded).
- For precise torque settings, use a pressure regulator.
- Set the mechanical stop for opening and closing.

Adjustment of pneumatic actuators with "spring-to-close" function:

- Select the number of springs for the required moment, then apply a safety factor of x1.25.
- Select the required air pressure for the opening torque, apply a safety factor of ×1,25, and use an air regulator.
- Set the mechanical stop for opening and closing.

Manual gearbox adjustment:

- Add a safety factor of x1.25 to the opening moment from Tab. 8 (or use the maximum MAST moment, which must not be exceeded).
- Calculate the handwheel diameter so that it complies with the ergonomics standards of the given country
- Set the mechanical stop for opening and closing.

9. Bolt lengths for pipes with weld-neck flanges according to EN1092-1

Bolt lengths are specified when using washers under the nuts and bolt heads.

9.1. Bolt lengths for connection to the piping of valves with type B (Wafer) and T(Lug) bodies

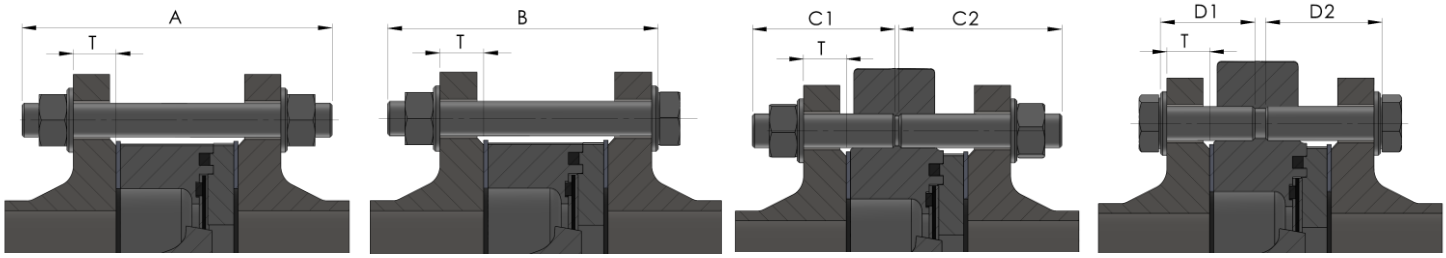

a) One threaded rod (type B) b) One bolt (type B) c) Two threaded rods (type T) d) Two bolts (type T)

Fig. 11: Dimensions of fasteners for valves DN50-DN600 with type B and T bodies

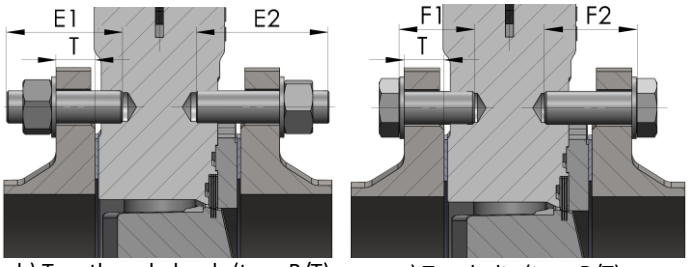

b) Two threaded rods (type B/T) a) Two bolts (type B/T)

Fig. 12: Dimensions of fasteners for valves DN450-600 with type B and T bodies

For valves DN450-600, it is necessary to use the fasteners from Fig. 11 in combination with the fasteners from Fig. 12 when connecting to the pipeline.

Tab. 9: Fastener dimensions for PN6

Size		PN6																
DN	NPS	Bolt size	Number of bolts, Thread. rods A, B	A Threaded rod Nut Washers [mm]	B Bolt Nut Washer [mm]	Number of bolts, thread. rods C, D		C Threaded rod Nut Washer [mm]		D Bolt Washer [mm]		Number of bolts, Threaded rods E, F		E Threaded rod Nut Washer [mm]		F Bolt Washer [mm]		T [mm]
						C1, D1	C2, D2	C1	C2	D1	D2	E1, F1	E2, F2	E1	E2	F1	F2	
50	2	M12	4	120	100	4	4	60	60	35	35	-	-	-	-	-	-	14
65	2 1/2	M12	4	120	100	4	4	60	60	40	40	-	-	-	-	-	-	14
80	3	M16	4	140	110	4	4	70	70	40	40	-	-	-	-	-	-	16
100	4	M16	4	140	120	4	4	70	70	45	45	-	-	-	-	-	-	16
125	5	M16	8	150	130	8	8	80	80	50	50	-	-	-	-	-	-	18
150	6	M16	8	150	130	8	8	80	80	40	55	-	-	-	-	-	-	18
200	8	M16	8	160	140	8	8	80	90	45	60	-	-	-	-	-	-	20
250	10	M16	12	170	150	12	12	80	90	50	65	-	-	-	-	-	-	22
300	12	M20	12	190	170	12	12	90	110	55	70	-	-	-	-	-	-	22
350	14	M20	12	210	180	12	12	100	120	60	80	-	-	-	-	-	-	22
400	16	M20	16	220	190	16	16	100	120	65	85	-	-	-	-	-	-	22
450	18	M20	12	230	200	12	12	110	130	75	90	4	4	90	110	55	70	22

Tab. 10: Fastener dimensions for PN10

Size		PN10																
DN	NPS	Bolt size	Number of bolts, Thread. rods A, B	A Threaded rod Nut Washers [mm]	B Bolt Nut Washer [mm]	Number of bolts, thread. rods C, D		C Threaded rod Nut Washer [mm]		D Bolt Washer [mm]		Number of bolts, Threaded rods E, F		E Threaded rod Nut Washer [mm]		F Bolt Washer [mm]		T [mm]
						C1, D1	C2, D2	C1	C2	D1	D2	E1, F1	E2, F1	E1	E2	F1	F2	
50	2	M16	4	140	120	4	4	70	70	40	45	-	-	-	-	-	-	18
65	21/2	M16	4	140	120	4	4	70	70	45	45	-	-	-	-	-	-	18
80	3	M16	8	140	120	8	8	70	70	45	45	-	-	-	-	-	-	20
100	4	M16	8	150	130	8	8	80	80	50	50	-	-	-	-	-	-	20
125	5	M16	8	160	140	8	8	80	80	50	55	-	-	-	-	-	-	22
150	6	M20	8	170	140	8	8	80	90	45	60	-	-	-	-	-	-	22
200	8	M20	8	180	150	8	8	90	100	50	60	-	-	-	-	-	-	24
250	10	M20	12	190	160	12	12	90	110	55	70	-	-	-	-	-	-	26
300	12	M20	12	200	170	12	12	90	110	60	75	-	-	-	-	-	-	26
350	14	M20	16	210	190	16	16	100	120	65	85	-	-	-	-	-	-	26
400	16	M24	16	230	200	16	16	110	130	70	90	-	-	-	-	-	-	26
450	18	M24	16	250	220	16	16	120	140	80	100	4	4	100	120	60	80	28
500	20	M24	16	260	230	16	16	130	140	85	105	4	4	100	110	60	75	28
600	24	M27	16	300	270	16	16	140	160	100	120	4	4	100	120	60	80	30

Tab. 11: Fastener dimensions for PN16

Size		PN16																
DN	NPS	Bolt size	Number of bolts, Thread. rods A, B	A Threaded rod Nut Washers [mm]	B Bolt Nut Washer [mm]	Number of bolts, thread. rods C, D		C Threaded rod Nut Washer [mm]		D Bolt Washer [mm]		Number of bolts, Threaded rods E, F		E Threaded rod Nut Washer [mm]		F Bolt Washer [mm]		T [mm]
						C1, D1	C2, D2	C1	C2	D1	D2	E1, F1	E2, F1	E1	E2	F1	F2	
50	2	M16	4	140	120	4	4	70	70	40	45	-	-	-	-	-	-	18
65	21/2	M16	4	140	120	4	4	70	70	45	45	-	-	-	-	-	-	18
80	3	M16	8	140	120	8	8	70	70	45	45	-	-	-	-	-	-	20
100	4	M16	8	150	130	8	8	80	80	50	50	-	-	-	-	-	-	20
125	5	M16	8	160	140	8	8	80	80	50	55	-	-	-	-	-	-	22
150	6	M20	8	170	140	8	8	80	90	45	60	-	-	-	-	-	-	22
200	8	M20	12	180	150	12	12	90	100	50	60	-	-	-	-	-	-	24
250	10	M24	12	200	170	12	12	90	110	55	70	-	-	-	-	-	-	26
300	12	M24	12	210	180	12	12	100	120	60	80	-	-	-	-	-	-	28
350	14	M24	16	230	200	16	16	110	130	70	90	-	-	-	-	-	-	30
400	16	M27	16	260	220	16	16	120	140	75	95	-	-	-	-	-	-	32
450	18	M27	16	270	240	16	16	130	150	85	105	4	4	110	130	65	85	34
500	20	M30	16	300	260	16	16	140	160	95	110	4	4	110	130	65	85	36
600	24	M33	16	340	300	16	16	160	180	110	130	4	4	130	150	75	95	40

Tab. 12: Fastener dimensions for PN25

Size		PN25																
DN	NPS	Bolt size	Number of bolts, Thread. rods A, B	A Threaded rod Nut Washers [mm]	B Bolt Nut Washer [mm]	Number of bolts, thread. rods C, D		C Threaded rod Nut Washer [mm]		D Bolt Washer [mm]		Number of bolts, Threaded rods E, F		E Threaded rod Nut Washer [mm]		F Bolt Washer [mm]		T [mm]
						C1, D1	C2, D2	C1	C2	D1	D2	E1, F1	E2, F1	E1	E2	F1	F2	
50	2	M16	4	140	120	4	4	70	70	45	45	-	-	-	-	-	-	20
65	21/2	M16	8	150	130	8	8	80	80	45	50	-	-	-	-	-	-	22
80	3	M16	8	150	130	8	8	80	80	50	50	-	-	-	-	-	-	24
100	4	M20	8	170	140	8	8	90	90	50	55	-	-	-	-	-	-	24
125	5	M24	8	190	160	8	8	100	100	55	60	-	-	-	-	-	-	26
150	6	M24	8	190	160	8	8	90	100	55	65	-	-	-	-	-	-	28
200	8	M24	12	200	170	12	12	100	110	55	70	-	-	-	-	-	-	30
250	10	M27	12	220	190	12	12	100	120	65	75	-	-	-	-	-	-	32
300	12	M27	16	240	200	16	16	110	130	65	85	-	-	-	-	-	-	34
350	14	M30	16	260	220	16	16	120	140	75	95	-	-	-	-	-	-	38
400	16	M33	16	290	240	16	16	140	150	85	105	-	-	-	-	-	-	40
450	18	M33	16	310	270	16	16	150	170	100	115	4	4	130	150	80	100	46
500	20	M33	16	330	290	16	16	160	180	105	125	4	4	130	150	80	95	48
600	24	M36	16	370	320	16	16	170	200	120	140	4	4	140	160	80	100	48

Tab. 13: Fastener dimensions for PN40

Size		PN40																
DN	NPS	Bolt size	Number of bolts, Thread. rods A, B	A Threaded rod Nut Washers [mm]	B Bolt Nut Washer [mm]	Number of bolts, thread. rods C, D		C Threaded rod Nut Washer [mm]		D Bolt Washer [mm]		Number of bolts, Threaded rods E, F		E Threaded rod Nut Washer [mm]		F Bolt Washer [mm]		T [mm]
						C1, D1	C2, D2	C1	C2	D1	D2	E1, F1	E2, F1	E1	E2	F1	F2	
50	2	M16	4	140	120	4	4	70	70	45	45	-	-	-	-	-	-	20
65	21/2	M16	8	150	130	8	8	80	80	45	50	-	-	-	-	-	-	22
80	3	M16	8	150	130	8	8	80	80	50	50	-	-	-	-	-	-	24
100	4	M20	8	170	140	8	8	90	90	50	55	-	-	-	-	-	-	24
125	5	M24	8	190	160	8	8	100	100	55	60	-	-	-	-	-	-	26
150	6	M24	8	190	160	8	8	90	100	55	65	-	-	-	-	-	-	28
200	8	M27	12	220	180	12	12	100	120	60	75	-	-	-	-	-	-	34
250	10	M30	12	240	200	12	12	110	130	65	85	-	-	-	-	-	-	38
300	12	M30	16	260	220	16	16	120	140	75	95	-	-	-	-	-	-	42
350	14	M33	16	290	250	16	16	140	160	85	105	-	-	-	-	-	-	46
400	16	M36	16	320	270	16	16	150	170	95	115	-	-	-	-	-	-	50

Tab. 14: Fastener dimensions for CLASS150

Size		CLASS150																
DN	NPS	Bolt size	Number of bolts, Thread. rods A, B	A Threaded rod Nut Washers [mm]	B Bolt Nut Washer [mm]	Number of bolts, thread. rods C, D		C Threaded rod Nut Washer [mm]		D Bolt Washer [mm]		Number of bolts, Threaded rods E, F		E Threaded rod Nut Washer [mm]		F Bolt Washer [mm]		T [mm]
						C1, D1	C2, D2	C1	C2	D1	D2	E1, F1	E2, F1	E1	E2	F1	F2	
50	2	5/8"-11 UNC	4	140	120	4	4	70	70	45	45	-	-	-	-	-	-	21,1
65	21/2	5/8"-11 UNC	4	150	130	4	4	80	80	50	50	-	-	-	-	-	-	24,3
80	3	5/8"-11 UNC	4	160	130	4	4	80	80	50	50	-	-	-	-	-	-	25,9
100	4	5/8"-11 UNC	8	160	140	8	8	80	80	55	55	-	-	-	-	-	-	25,9
125	5	3/4"-10 UNC	8	180	150	8	8	90	90	55	55	-	-	-	-	-	-	25,9
150	6	3/4"-10 UNC	8	180	150	8	8	90	100	50	65	-	-	-	-	-	-	27,4
200	8	3/4"-10 UNC	8	190	160	8	8	90	100	55	70	-	-	-	-	-	-	30,6
250	10	7/8"-9 UNC	12	210	180	12	12	100	110	60	80	-	-	-	-	-	-	32,2
300	12	7/8"- 9 UNC	12	220	190	12	12	110	120	65	85	-	-	-	-	-	-	33,8
350	14	1"-8 UNC	12	250	220	12	12	120	140	75	95	-	-	-	-	-	-	37
400	16	1"-8 UNC	16	270	230	16	16	130	150	85	100	-	-	-	-	-	-	38,6
450	18	1 1/8"-7 UNC	12	290	250	12	12	140	160	95	110	4	4	120	140	70	90	41,7
500	20	1 1/8"-7 UNC	16	310	270	16	16	150	170	105	120	4	4	120	140	75	90	44,9
600	24	1 1/4"-7 UNC	16	360	320	16	16	170	190	120	140	4	4	140	160	80	100	49,7

Tab. 15: Fastener dimensions for CLASS300

Size		CLASS300																
DN	NPS	Bolt size	Number of bolts, Thread. rods A, B	A Threaded rod Nut Washers [mm]	B Bolt Nut Washer [mm]	Number of bolts, thread. rods C, D		C Threaded rod Nut Washer [mm]		D Bolt Washer [mm]		Number of bolts, Threaded rods E, F		E Threaded rod Nut Washer [mm]		F Bolt Washer [mm]		T [mm]
						C1, D1	C2, D2	C1	C2	D1	D2	E1, F1	E2, F1	E1	E2	F1	F2	
50	2	5/8"-11 UNC	8	150	130	8	8	80	80	45	50	-	-	-	-	-	-	24,3
65	21/2	3/4"-10 UNC	8	170	140	8	8	90	90	50	55	-	-	-	-	-	-	27,4
80	3	3/4"-10 UNC	8	180	150	8	8	90	90	55	55	-	-	-	-	-	-	30,6
100	4	3/4"-10 UNC	8	190	160	8	8	100	100	60	65	-	-	-	-	-	-	33,8
125	5	3/4"-10 UNC	8	200	170	8	8	100	100	65	70	-	-	-	-	-	-	37
150	6	3/4"-10 UNC	12	200	180	12	12	100	110	60	75	-	-	-	-	-	-	38,6
200	8	7/8"-9 UNC	12	230	190	12	12	110	120	70	85	-	-	-	-	-	-	43,3
250	10	1"-8 UNC	16	260	220	16	16	120	140	80	95	-	-	-	-	-	-	49,7
300	12	1 1/8"-7 UNC	16	280	240	16	16	130	150	85	105	-	-	-	-	-	-	52,8

9.2. Bolt lengths for connection to the piping of valves with type DF (Double Flange) bodies

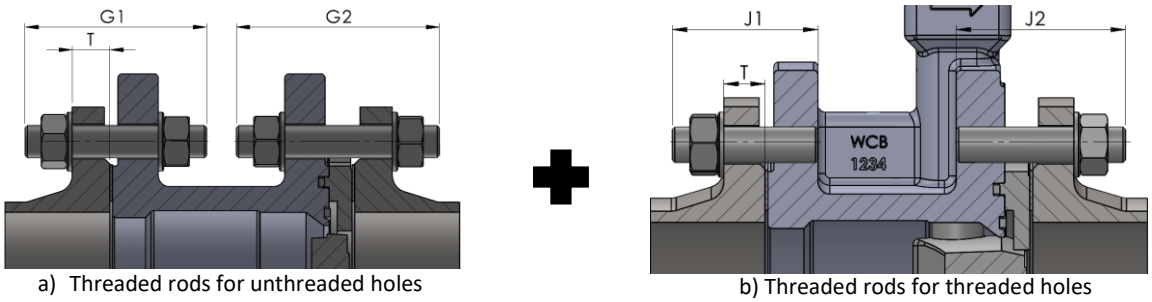

a) Threaded rods for unthreaded holes

b) Threaded rods for threaded holes

Fig. 13: Dimensions of fasteners for valves with DF (Double Flange) type bodies

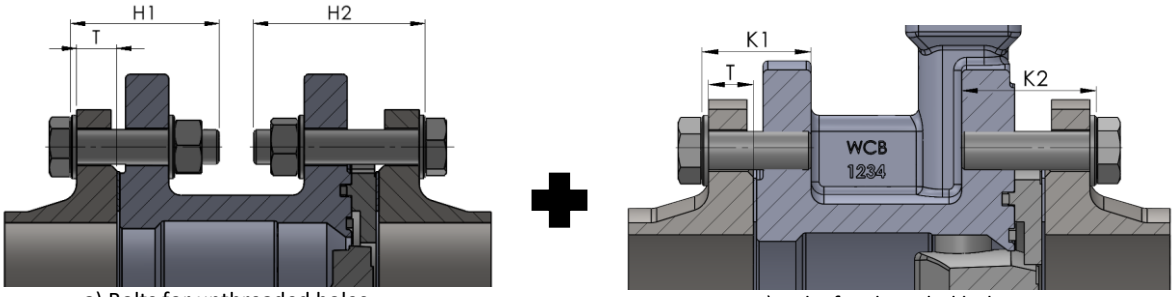

a) Bolts for unthreaded holes

a) Bolts for threaded holes

Fig. 14: Dimensions of fasteners for valves with DF (Double Flange) type bodies

Valves with DF (Double Flange) bodies may have threaded holes on both flanges at the neck (upper part) and pivot (lower part), see Fig. 15. Therefore, a combination of threaded rods/bolts must be used as shown in Fig. 13 and Fig. 14.

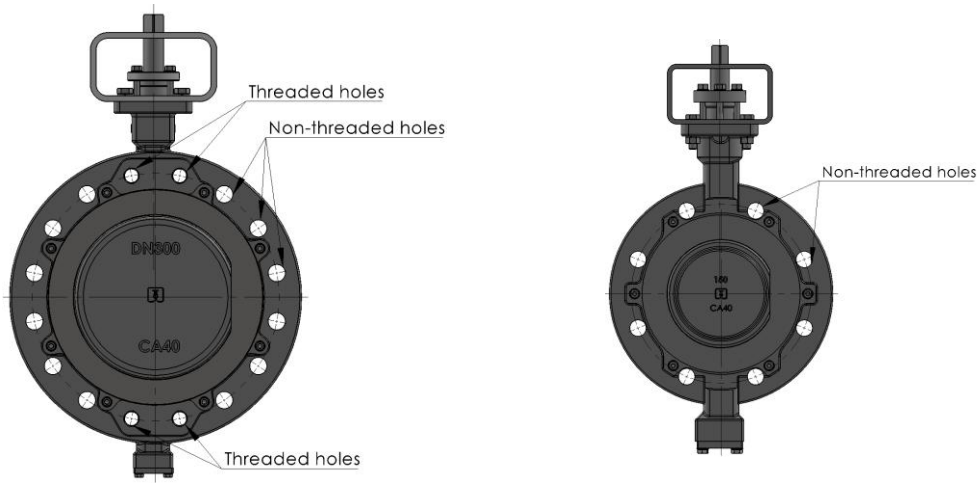

a) Threaded holes at the throat and pivot

b) Through holes without thread

Fig. 15: Connection design for valves with DF (Double flange) type body

Tab. 16: Fastener dimensions for PN6

Size		PN6														
DN	NPS	Bolt size	Number of bolts, Thread. rods G, H		G Thread. rods Nut Washers [mm]		H Bolt Nut Washer [mm]		Number of bolts, Thread. rods J, K		J Thread. rods Nut Washer [mm]		K Bolt Washer [mm]		T [mm]
			G1, H1	G2, H2	G1	G2	H1	H2	J1, K1	J2, K2	J1	J2	K1	K2	
50	2	M12	4	4	75	80	55	65	-	-	-	-	-	-	14
65	2 1/2	M12	4	4	75	85	60	70	-	-	-	-	-	-	14
80	3	M16	-	-	-	-	-	-	4	4	70	70	50	50	16
100	4	M16	-	-	-	-	-	-	4	4	70	75	50	50	16
125	5	M16	4	4	95	105	75	80	4	4	70	80	50	55	18
150	6	M16	8	8	95	105	75	85	-	-	-	-	-	-	18
200	8	M16	8	8	100	110	80	90	-	-	-	-	-	-	20
250	10	M16	12	12	105	120	85	95	-	-	-	-	-	-	22
300	12	M20	-	-	-	-	-	-	12	12	90	105	60	75	22
350	14	M20	8	8	125	145	95	115	4	4	95	110	65	85	22
400	16	M20	-	-	-	-	-	-	16	16	95	115	65	90	22

Tab. 17: Fastener dimensions for PN10

Size		PN10														
DN	NPS	Bolt size	Number of bolts, Thread. rods G, H		G Thread. rods Nut Washers [mm]		H Bolt Nut Washer [mm]		Number of bolts, Thread. rods J, K		J Thread. rods Nut Washer [mm]		K Bolt Washer [mm]		T [mm]
			G1, H1	G2, H2	G1	G2	H1	H2	J1, K1	J2, K2	J1	J2	K1	K2	
50	2	M16	4	4	90	95	65	75	-	-	-	-	-	-	18
65	2 1/2	M16	4	4	90	100	70	80	-	-	-	-	-	-	18
80	3	M16	4	4	100	95	75	75	4	4	75	75	50	50	20
100	4	M16	4	4	95	100	75	80	4	4	75	75	50	55	20
125	5	M16	4	4	100	105	75	85	4	4	75	85	55	60	22
150	6	M20	8	8	115	125	85	95	-	-	-	-	-	-	22
200	8	M20	8	8	120	130	90	100	-	-	-	-	-	-	24
250	10	M20	8	8	120	135	95	105	4	4	80	95	50	65	26
300	12	M20	8	8	125	140	95	115	4	4	95	110	65	80	26
350	14	M20	12	12	130	150	100	120	4	4	95	120	70	90	26
400	16	M24	12	12	140	160	105	130	4	4	105	125	70	90	26
500	20	M24	16	16	150	165	120	135	4	4	90	105	60	75	28
600	24	M27	16	16	170	190	135	155	4	4	100	120	60	80	30

Tab. 18: Fastener dimensions for PN16

Size		PN16														
DN	NPS	Bolt size	Number of bolts, Thread. rods G, H		G Thread. rods Nut Washers [mm]		H Bolt Nut Washer [mm]		Number of bolts, Thread. rods J, K		J Thread. rods Nut Washer [mm]		K Bolt Washer [mm]		T [mm]
			G1, H1	G2, H2	G1	G2	H1	H2	J1, K1	J2, K2	J1	J2	K1	K2	
50	2	M16	4	4	90	95	65	75	-	-	-	-	-	-	18
65	2 1/2	M16	4	4	90	100	70	80	-	-	-	-	-	-	18
80	3	M16	4	4	100	95	75	75	4	4	75	75	50	50	20
100	4	M16	4	4	95	100	75	80	4	4	75	75	50	60	20
125	5	M16	4	8	100	105	80	85	4	4	75	85	55	60	22
150	6	M20	8	8	115	125	85	95	-	-	-	-	-	-	22
200	8	M20	8	8	120	130	90	100	4	4	90	100	60	70	24
250	10	M24	8	8	130	145	100	115	4	4	85	95	50	65	26
300	12	M24	8	8	135	150	105	120	4	4	100	115	65	85	28
350	14	M24	12	12	140	160	110	130	4	4	105	125	75	95	30
400	16	M27	12	12	155	175	120	140	4	4	115	135	75	100	32
500	20	M30	16	16	175	190	135	150	4	4	110	125	70	85	36
600	24	M33	16	16	195	215	155	170	4	4	120	140	75	95	40

Tab. 19: Fastener dimensions for PN25

Size		PN25														
DN	NPS	Bolt size	Number of bolts, Thread. rods G, H		G Thread. rods Nut Washers [mm]		H Bolt Nut Washer [mm]		Number of bolts, Thread. rods J, K		J Thread. rods Nut Washer [mm]		K Bolt Washer [mm]		T [mm]
			G1, H1	G2, H2	G1	G2	H1	H2	J1, K1	J2, K2	J1	J2	K1	K2	
50	2	M16	4	4	90	95	70	75	-	-	-	-	-	-	20
65	2 1/2	M16	4	4	95	105	75	80	4	4	70	80	50	60	22
80	3	M16	4	4	105	100	80	80	4	4	80	80	55	55	24
100	4	M20	4	4	115	120	85	90	4	4	85	90	55	60	24
125	5	M24	4	4	125	135	95	100	4	4	90	100	60	65	26
150	6	M24	8	8	130	140	95	105	-	-	-	-	-	-	28
200	8	M24	8	8	135	145	100	110	4	4	100	110	65	75	30
250	10	M27	8	8	150	160	110	125	4	4	95	110	60	75	32
300	12	M27	12	12	150	170	115	125	4	4	110	125	75	90	34
350	14	M30	12	12	165	185	125	145	4	4	120	140	80	100	38
400	16	M33	12	12	180	200	135	155	4	4	130	150	85	110	40
500	20	M33	16	16	195	215	155	170	4	4	130	145	85	100	48
600	24	M36	16	16	220	235	165	185	4	4	140	155	90	105	48

Tab. 20: Fastener dimensions for PN40

Size		PN40														
DN	NPS	Bolt size	Number of bolts, Thread. rods G, H		G Thread. rods Nut Washers [mm]		H Bolt Nut Washer [mm]		Number of bolts, Thread. rods J, K		J Thread. rods Nut Washer [mm]		K Bolt Washer [mm]		T [mm]
			G1, H1	G2, H2	G1	G2	H1	H2	J1, K1	J2, K2	J1	J2	K1	K2	
50	2	M16	4	4	90	95	70	75	-	-	-	-	-	-	20
65	2 1/2	M16	4	4	95	105	75	80	4	4	70	80	50	55	22
80	3	M16	4	4	100	100	80	80	4	4	80	80	55	55	24
100	4	M20	4	4	115	120	85	90	4	4	82	90	55	60	24
125	5	M24	4	4	125	130	95	100	4	4	90	100	60	65	26
150	6	M24	8	8	130	140	95	105	-	-	-	-	-	-	28
200	8	M27	8	8	145	160	110	120	4	4	105	120	70	80	34
250	10	M30	8	8	160	175	120	135	4	4	110	120	70	82	38
300	12	M30	12	12	165	180	125	140	4	4	125	140	80	95	42
350	14	M33	12	12	185	205	140	160	4	4	135	155	90	110	46
400	16	M36	12	12	200	220	150	175	4	4	135	160	85	105	50

Tab. 21: Fastener dimensions for Class150

Size		Class150														
DN	NPS	Bolt size	Number of bolts, Thread. rods G, H		G Thread. rods Nut Washers [mm]		H Bolt Nut Washer [mm]		Number of bolts, Thread. rods J, K		J Thread. rods Nut Washer [mm]		K Bolt Washer [mm]		T [mm]
			G1, H1	G2, H2	G1	G2	H1	H2	J1, K1	J2, K2	J1	J2	K1	K2	
50	2	5/8“-11 UNC	4	4	90	95	70	75	-	-	-	-	-	-	21,1
65	2 1/2	5/8“-11 UNC	4	4	95	105	75	85	-	-	-	-	-	-	24,3
80	3	3/4“-10 UNC	-	-	-	-	-	-	4	4	80	80	60	60	25,9
100	4	3/4“-10 UNC	4	4	105	105	80	85	4	4	80	80	55	55	25,9
125	5	3/4“-10 UNC	4	4	120	125	85	95	4	4	85	95	55	60	25,9
150	6	3/4“-10 UNC	8	8	120	130	90	100	-	-	-	-	-	-	27,4
200	8	7/8“-9 UNC	8	8	125	135	95	110	-	-	-	-	-	-	30,6
250	10	1“-8 UNC	8	8	135	150	105	120	4	4	90	105	55	70	32,2
300	12	1 1/8“-7 UNC	8	8	140	155	110	125	4	4	105	120	70	85	33,8
350	14	1 1/8“-7 UNC	8	8	160	180	120	140	4	4	120	140	70	90	37
400	16	1 1/4“-7 UNC	12	12	160	185	125	145	4	4	110	130	70	90	38,6
500	20	1 1/4“-7 UNC	16	16	185	200	145	160	4	4	120	135	75	95	44,9
600	24	1 1/2“ UNC	16	16	205	225	165	180	4	4	130	150	85	105	49,7

Tab. 22: Fastener dimensions for Class300

Size		Class300														
DN	NPS	Bolt size	Number of bolts, Thread. rods G, H		G Thread. rods Nut Washers [mm]		H Bolt Nut Washer [mm]		Number of bolts, Thread. rods J, K		J Thread. Rods Nut Washer [mm]		K Bolt Washer [mm]		T [mm]
			G1, H1	G2, H2	G1	G2	H1	H2	J1, K1	J2, K2	J1	J2	K1	K2	
50	2	5/8“-11 UNC	4	4	100	105	75	85	4	4	75	80	55	60	24,3
65	2 1/2	3/4“-10 UNC	4	4	120	130	85	90	4	4	85	95	60	70	27,4
80	3	3/4“-10 UNC	4	4	125	125	85	95	4	4	90	90	60	60	30,6
100	4	3/4“-10 UNC	4	4	125	130	90	90	4	4	95	95	65	65	33,8
125	5	3/4“-10 UNC	4	4	130	135	100	110	4	4	100	105	70	75	37
150	6	3/4“-10 UNC	8	8	130	140	105	110	4	4	100	110	70	80	38,6
200	8	7/8“-9 UNC	8	8	145	155	110	120	4	4	110	125	80	90	43,3
250	10	1“-8 UNC	12	12	165	180	125	140	4	4	115	130	75	90	49,7
300	12	1 1/8“-7 UNC	12	12	175	190	130	145	4	4	135	150	90	105	52,8